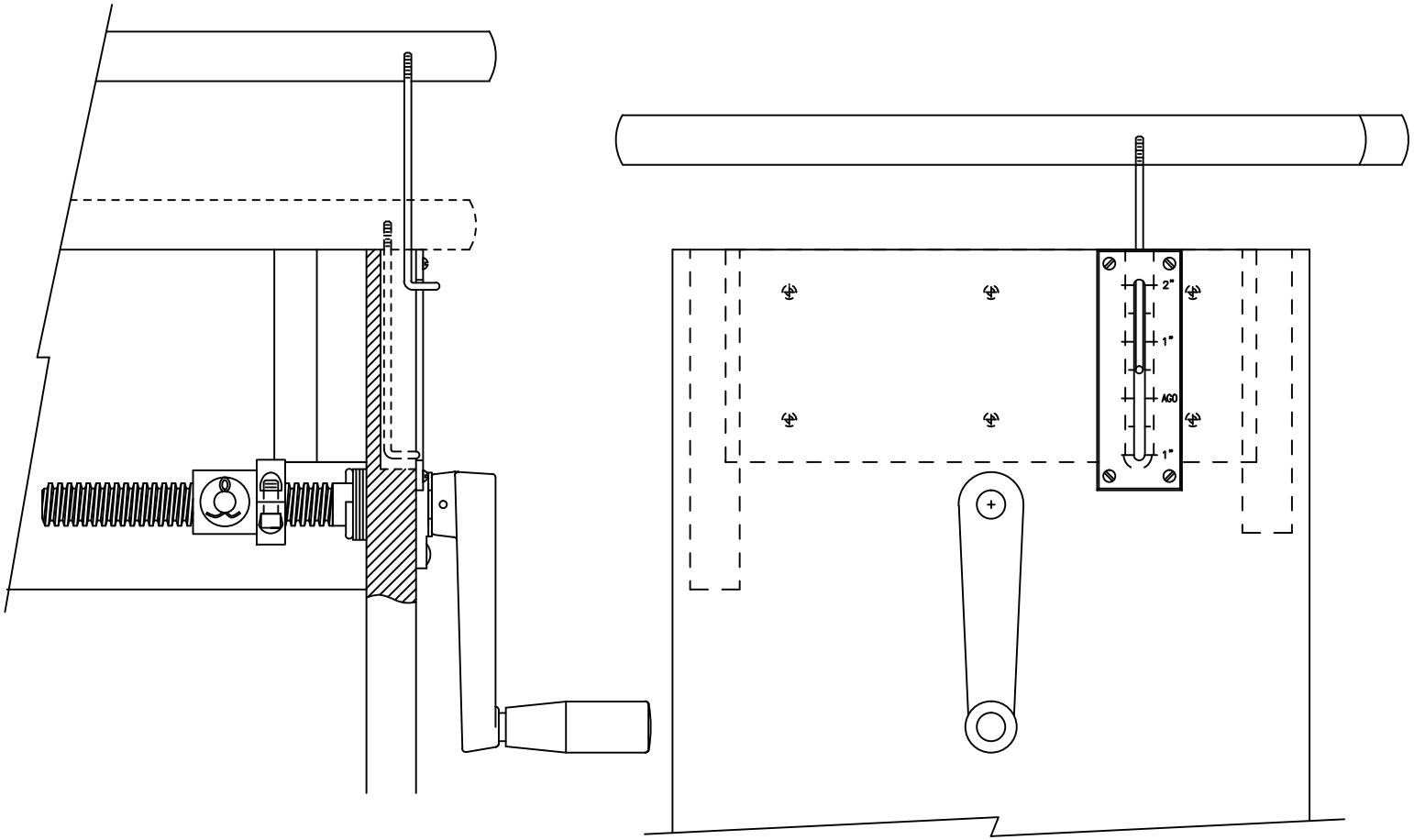

UNLESS OTHERWISE SPECIFIED DIMENSIONS ARE IN INCHES	DREAM SUPPLY INDUSTRIES inc., erie, pa.		
TOLERANCES .XXX ± .005 ANGLES ± 1/2" HOLES ± .005	NAME: ADJUSTABLE BENCH GAUGE ASSEMBLY		
	FILE PATH: DWG/PART NO/051090	SHEET 1 OF 1	SCALE: .50=1
	MAT'L DESCRIPTION: MAT'L. DESCRIPTION	PART/DWG. NO. 510.90	REV. C
DO NOT SCALE READ ALL NOTES			