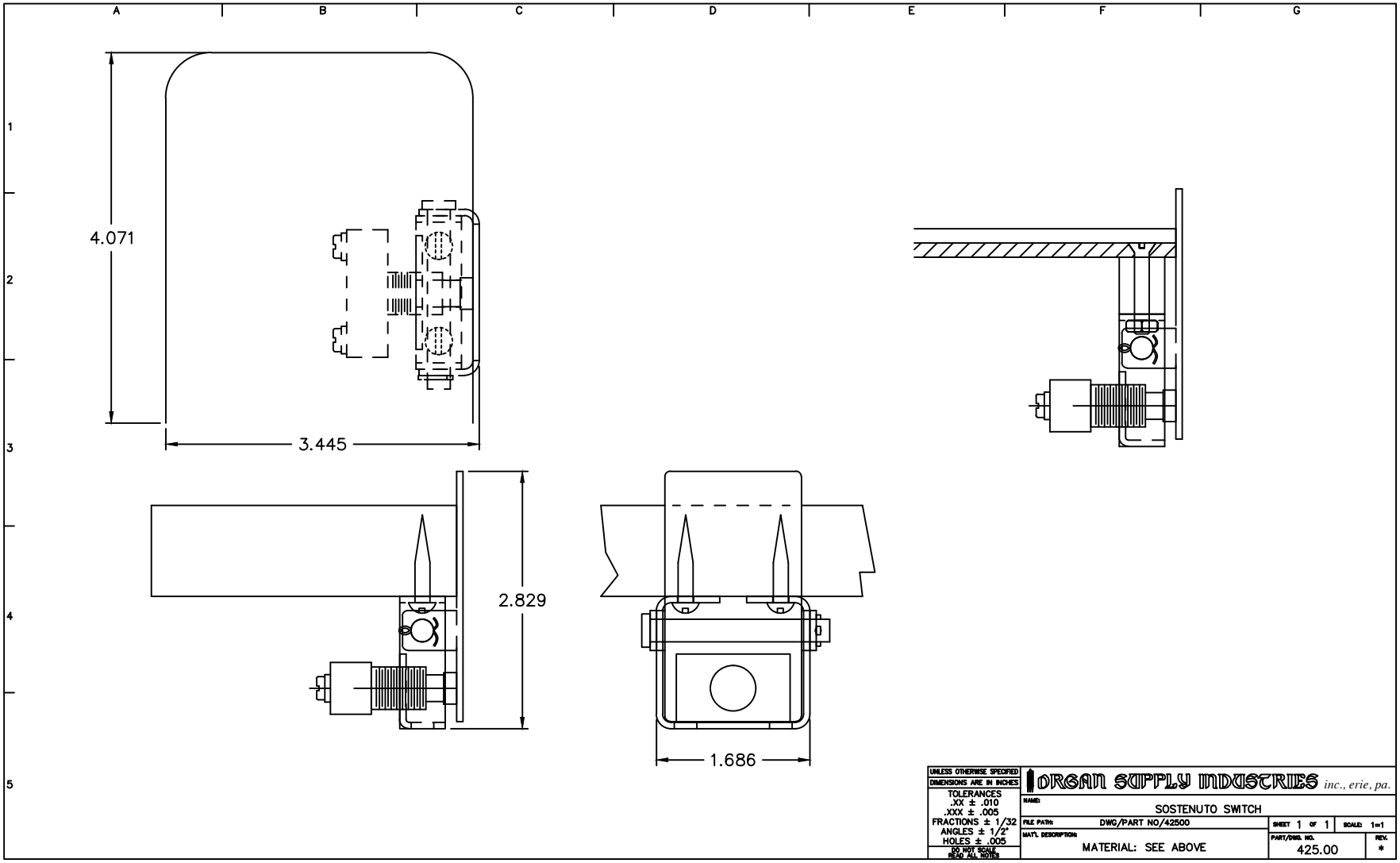

UNLESS OTHERWISE SPECIFIED DIMENSIONS ARE IN INCHES TOLERANCES .XX ± .010 .XXX ± .005 FRACTIONS ± 1/32 ANGLES ± 1/2° HOLES ± .005 DO NOT SCALE READ ALL NOTES	DREAN SUPPLY INDUSTRIES *inc., erie, pa.*		
	NAME: SOSTENUTO SWITCH		
	FILE PATH: DWG/PART NO/42500	SHEET 1 OF 1	SCALE: 1=1
	MAT'L DESCRIPTION: MATERIAL: SEE ABOVE	PART/DWG. NO. 425.00	REV. *